Bar Stock Ball Valves

BP Series

Features

- ◎ Working pressure up to: 10000 psig (690 bar)
- ◎ Working temperature: -40°F to 450°F (-40°C to 232°C)
- ◎ Bi-directional flow for 2-way valves
- ◎ Seat wear compensation by free floating ball
- ◎ Variety of end connections
- ◎ Blowout proof stem with self-sealing function
- ◎ Handle color options are available
- ◎ Optional pneumatic and electric actuator
- ◎ Leak-tight performance testing with nitrogen or compressed air for every valve at the maximum working pressure (not higher than 6000 psig) to meet the requirement of no visible leak

2-way Pressure vs. Temperature

PEEK Seat

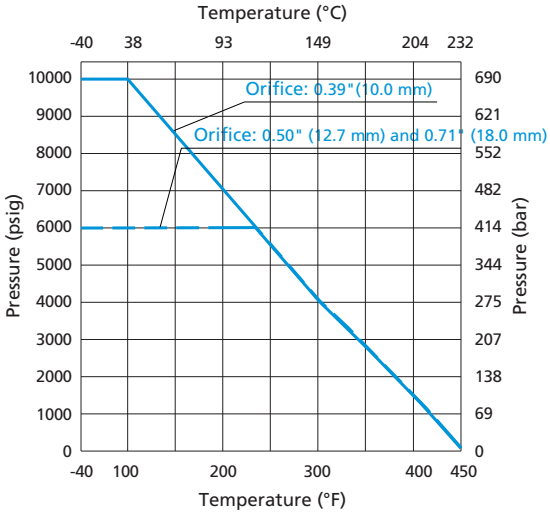

PVDF Seat

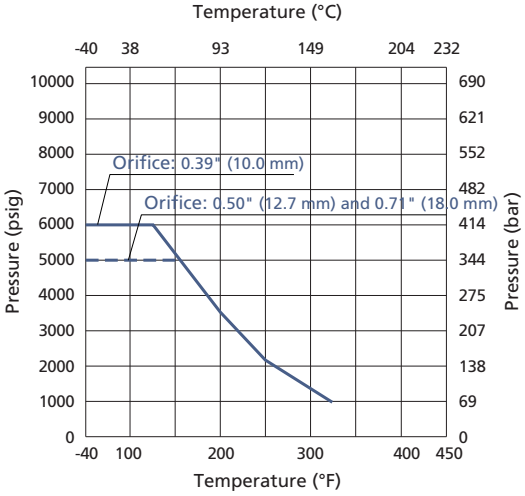

PCTFE Seat

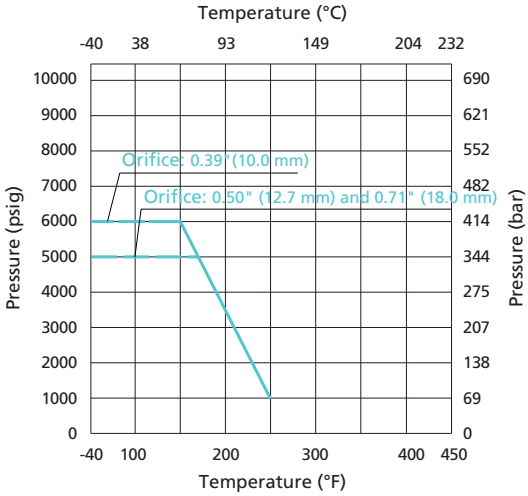

3-way Pressure vs. Temperature

PEEK Seat

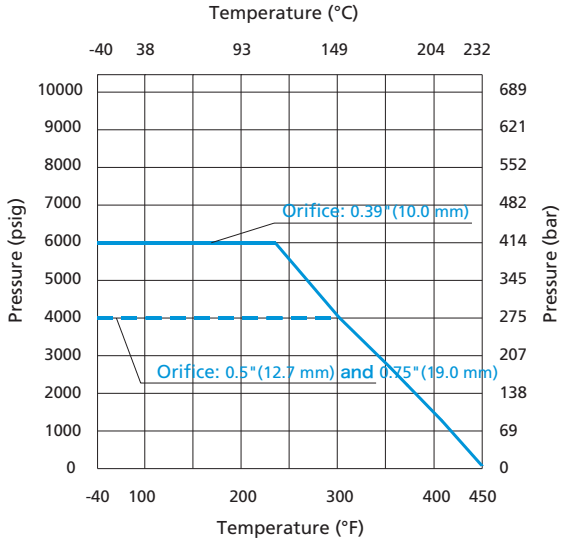

PVDF Seat

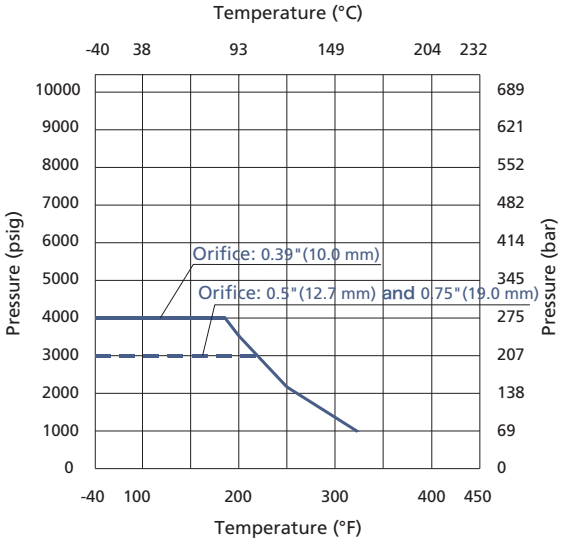

PCTFE Seat

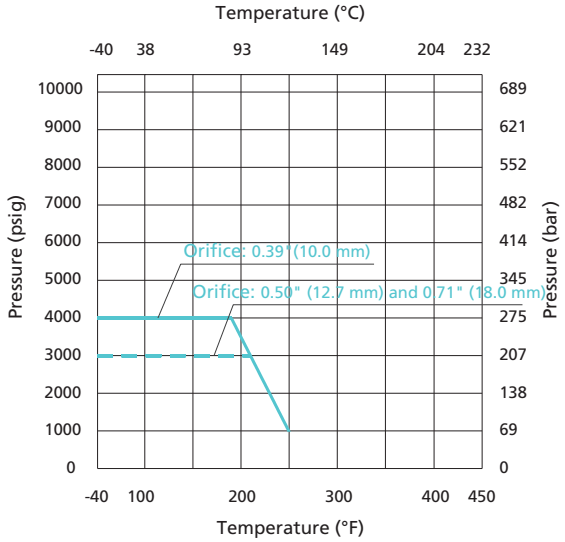

Working Temperature Rating

Material	Temperature Range °C (°F)
Fluorocarbon FKM	-40 to 232 (-40 to 450)
Buna–N	-28 to 94 (-18 to 200)
Neoprene	-28 to 121 (-18 to 250)
Ethylene Propylene	-40 to 148 (-40 to 300)

1.The working temperature of the valves is restricted by the working temperature of the seat and O-ring. The working temperature range of the valves should be the overlapped area of the two working temperature curves.

2.Graphs are with 316SS body. For information of body in other materials, please contact the authorized representative or FITOK GROUP.

Standard Materials of Construction

2-way Valves

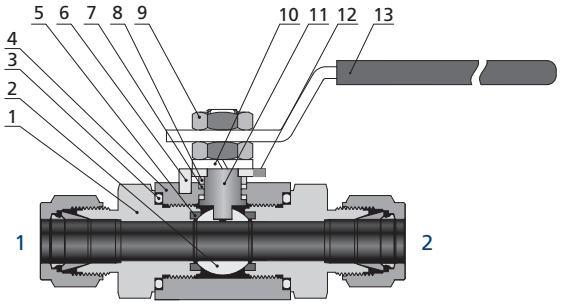

3-way Valves

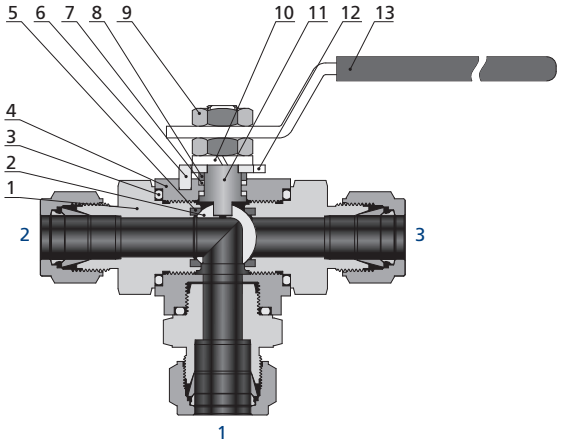

Item	Component	Body Material	
		316 SS	Alloy 400
1	*End Connection*	*316 SS/A479*	*Alloy 400/B164*
2	*Ball*	*316 SS/A479*	*Alloy R-405/B164*
3	*O-ring*	*Fluorocarbon FKM/Buna-N/ Neoprene/Ethylene Propylene*	
4	*Body*	*316 SS/A479*	*Alloy 400/B164*
5	*Seat*	*PVDF or PCTFE or PEEK*	
6	Stop Pin	SS	
7	*Stem Packing*	*PTFE/D1710*	
8	Stem Washer	316 SS/A276	
9	Stem Nut	SS	
10	Spring Washer	316 SS/A276	
11	*Stem*	*316 SS/A479*	
12	Stop Block	304 SS/A240	
13	Handle	SS with vinyl cover	

Note: Wetted components are listed in italic.
Other materials are available upon request.

Dimensions

2-way Valves

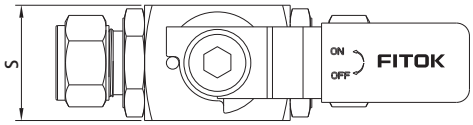

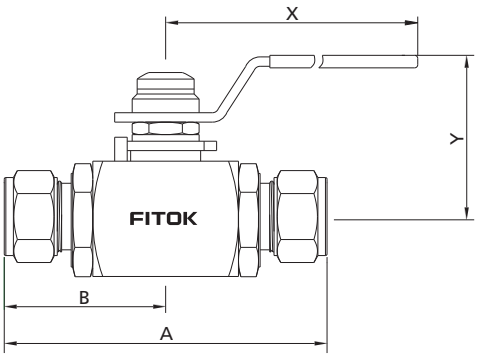

Basic Ordering Number	Connection Type and Size	Orifice in. (mm)	Cv	Dimension, in. (mm)				
	Connection 1/2			A	B	X	Y	S
BP□□-ML6-10	6 mm FITOK	0.39 (10.0)	1.2	3.54 (90.0)	1.77 (45.0)	5.12 (130.0)	1.73 (44.0)	1.30 (32.0)
BP□□-ML8-10	8 mm FITOK			3.60 (91.6)	1.80 (45.8)			
BP□□-ML10-10	10 mm FITOK		3.7	3.70 (94.0)	1.85 (47.0)			
BP□□-ML12-10	12 mm FITOK		7.5	3.94 (100.0)	1.97 (50.0)			
BP□□-ML14-10	14 mm FITOK							
BP□□-FL4-10	1/4" FITOK		1.2	3.60 (91.6)	1.80 (45.8)			
BP□□-FL6-10	3/8" FITOK		3.7	3.72 (94.6)	1.86 (47.3)			
BP□□-FL8-10	1/2" FITOK		7.5	3.92 (99.6)	1.96 (49.8)			
BP□□-FNS4-10	1/4 Female NPT			3.03 (77.0)	1.52 (38.5)			
BP□□-FNS6-10	3/8 Female NPT			2.80 (71.0)	1.40 (35.5)			
BP□□-FNS8-10	1/2 Female NPT			3.11 (79.0)	1.56 (39.5)			
BP□□-NS4-10	1/4 Male NPT		3.7	3.36 (85.4)	1.68 (42.7)			
BP□□-NS6-10	3/8 Male NPT		7.5					
BP□□-NS8-10	1/2 Male NPT			3.75 (95.2)	1.88 (47.6)			
BP□□-ML16-13	16 mm FITOK	0.50 (12.7)	10.0	4.42 (112.2)	2.21 (56.1)	5.71 (145.0)	1.89 (48.0)	1.50 (38.0)
BP□□-ML18-13	18 mm FITOK			4.12 (104.6)	2.06 (52.3)			
BP□□-ML20-13	20 mm FITOK			4.43 (112.6)	2.22 (56.3)			
BP□□-ML22-13	22 mm FITOK							
BP□□-FL10-13	5/8" FITOK			4.36 (110.6)	2.18 (55.3)			
BP□□-FL12-13	3/4" FITOK							
BP□□-FNS8-13	1/2 Female NPT			3.54 (90.0)	1.77 (45.0)			
BP□□-FNS12-13	3/4 Female NPT			4.09 (104.0)	2.05 (52.0)			
BP□□-NS12-13	3/4 Male NPT			4.14 (105.2)	2.07 (52.6)			
BP□□-ML20-19	20 mm FITOK	0.71 (18.0)	19.0	4.87 (123.8)	2.43 (61.9)	6.30 (160.0)	2.08 (53.0)	1.96 (50.0)
BP□□-ML22-19	22 mm FITOK							
BP□□-ML25-19	25 mm FITOK		30.0	5.11 (129.8)	2.66 (64.9)			
BP□□-FL12-19	3/4" FITOK		19.0	4.59 (116.6)	2.29 (58.3)			
BP□□-FL16-19	1" FITOK		30.0	5.11 (129.8)	2.66 (64.9)			
BP□□-FNS12-19	3/4 Female NPT			3.81 (96.8)	1.91 (48.4)			
BP□□-FNS16-19	1 Female NPT			4.26 (108.2)	2.13 (54.1)			
BP□□-NS12-19	3/4 Male NPT		19.0	4.54 (115.2)	2.27 (57.6)			
BP□□-NS16-19	1 Male NPT		30.0	4.91 (124.8)	2.45 (62.4)			

3-way Valves

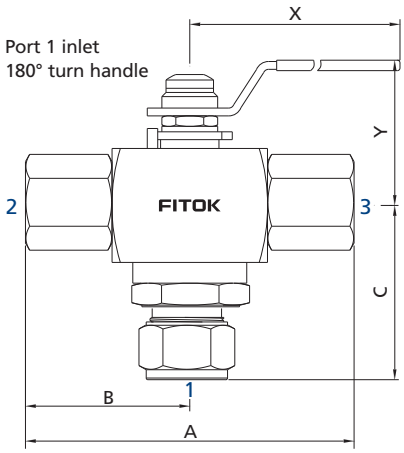

Vertical Pattern

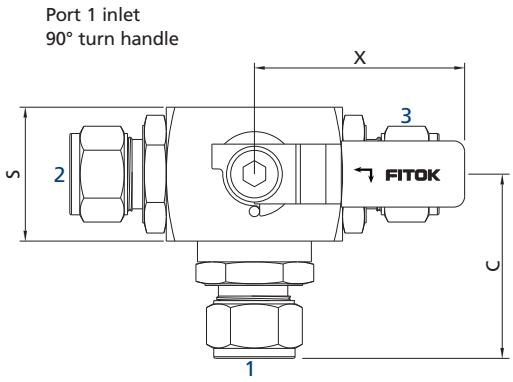

Horizontal Pattern

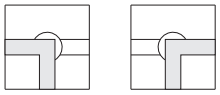

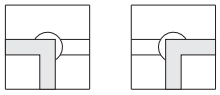

Basic Ordering Number	Connection Type and Size	Orifice in. (mm)	Cv	Dimension, in. (mm)					
	Connection 1/2/3			A	B	C	X	Y	S
BP□□-ML6-10-3□	6 mm FITOK	0.39 (10.0)	1.2	3.54 (90.0)	1.77 (45.0)	2.00 (51.0)	5.12 (130.0)	1.73 (44.0)	1.30 (32.0)
BP□□-ML8-10-3□	8 mm FITOK			3.60 (91.6)	1.80 (45.8)	2.02 (51.3)			
BP□□-ML10-10-3□	10 mm FITOK		3.7	3.70 (94.0)	1.85 (47.0)	2.07 (52.5)			
BP□□-ML12-10-3□	12 mm FITOK		7.5	3.94 (100.0)	1.97 (50.0)	2.18 (55.5)			
BP□□-ML14-10-3□	14 mm FITOK								
BP□□-FL4-10-3□	1/4" FITOK		1.2	3.60 (91.6)	1.80 (45.8)	2.01 (53.3)			
BP□□-FL6-10-3□	3/8" FITOK		3.7	3.72 (94.6)	1.86 (47.3)	2.16 (54.8)			
BP□□-FL8-10-3□	1/2" FITOK		7.5	3.92 (99.6)	1.96 (49.8)	2.13 (54.0)			
BP□□-FNS4-10-3□	1/4 Female NPT			3.03 (77.0)	1.52 (38.5)	1.44 (36.5)			
BP□□-FNS6-10-3□	3/8 Female NPT			2.80 (71.0)	1.40 (35.5)	1.57 (40.0)			
BP□□-FNS8-10-3□	1/2 Female NPT			3.27 (83.0)	1.63 (41.5)	1.83 (46.4)			
BP□□-NS4-10-3□	1/4 Male NPT		3.7	3.36 (85.4)	1.68 (42.7)	1.90 (48.2)			
BP□□-NS6-10-3□	3/8 Male NPT		7.5						
BP□□-NS8-10-3□	1/2 Male NPT			3.75 (95.2)	1.88 (47.6)	2.09 (53.1)			

Basic Ordering Number	Connection Type and Size	Orifice in. (mm)	Cv	Dimension, in. (mm)					
	Connection 1/2/3			A	B	C	X	Y	S
BP□□-ML16-13-3□	16 mm FITOK	0.50 (12.7)	10.0	4.04 (102.6)	2.02 (51.3)	2.41 (61.3)	5.71 (145.0)	1.89 (48.0)	1.50 (38.0)
BP□□-ML18-13-3□	18 mm FITOK			4.12 (104.6)	2.06 (52.3)	2.45 (62.3)			
BP□□-ML20-13-3□	20 mm FITOK			4.43 (112.6)	2.22 (56.3)	2.61 (66.3)			
BP□□-ML22-13-3□	22 mm FITOK								
BP□□-FL10-13-3□	5/8" FITOK			4.36 (110.6)	2.18 (55.3)	2.57 (65.3)			
BP□□-FL12-13-3□	3/4" FITOK								
BP□□-FNS8-13-3□	1/2 Female NPT			3.82 (97.0)	1.91 (48.5)	1.95 (49.5)			
BP□□-FNS12-13-3□	3/4 Female NPT					2.16 (55.0)			
BP□□-NS12-13-3□	3/4 Male NPT			4.14 (105.2)	2.07 (52.6)	2.46 (62.6)			
BP□□-ML20-19-3□	20 mm FITOK	0.71 (18.0)	19.0	4.87 (123.8)	2.43 (61.9)	2.89 (73.4)	6.30 (160.0)	2.08 (53.0)	1.96 (50.0)
BP□□-ML22-19-3□	22 mm FITOK								
BP□□-ML25-19-3□	25 mm FITOK		30.0	5.11 (129.8)	2.66 (64.9)	3.00 (76.2)			
BP□□-FL12-19-3□	3/4" FITOK		19.0	4.86 (123.4)	2.43 (61.7)	3.02 (76.7)			
BP□□-FL16-19-3□	1" FITOK		30.0	5.11 (129.8)	2.66 (64.9)	2.85 (72.4)			
BP□□-FNS12-19-3□	3/4 Female NPT			3.82 (97.0)	1.91 (48.5)	2.22 (56.5)			
BP□□-FNS16-19-3□	1 Female NPT			4.26 (108.2)	2.13 (54.1)	2.40 (60.8)			
BP□□-NS12-19-3□	3/4 Male NPT		19.0	4.54 (115.2)	2.27 (57.6)	2.72 (69.1)			
BP□□-NS16-19-3□	1 Male NPT		30.0	4.91 (124.8)	2.45 (62.4)	2.90 (73.9)			

1. FITOK means FITOK double ferrule tube fittings, TS means fractional tube socket weld, MTS means metric tube socket weld, TB means fractional tube butt weld, MTB means metric tube butt weld, PS means pipe socket weld, PB means pipe butt weld.
2. Sizes and types listed are standard. Other sizes and types are available upon request, refer to the ordering information.
3. Dimensions are shown with FITOK nuts finger-tightened. All dimensions are for reference only and are subject to change. For dimensions not shown above, please contact the authorized representative or FITOK Group.

Panel Mounting Options

Dimension for Panel Mounting

Orifice in. (mm)	L1 in. (mm)	L2 in. (mm)	T1 in. (mm)	T2 in. (mm)
0.39 (10.0)	1.02 (26.0)	1.02 (26.0)	0.20 (5.0)	1.18 (30.0)
0.50 (12.7)	1.18 (30.0)	1.18 (30.0)	0.20 (5.0)	1.50 (38.0)
0.71 (18.0)	1.42 (36.0)	1.42 (36.0)	0.20 (5.0)	1.50 (38.0)

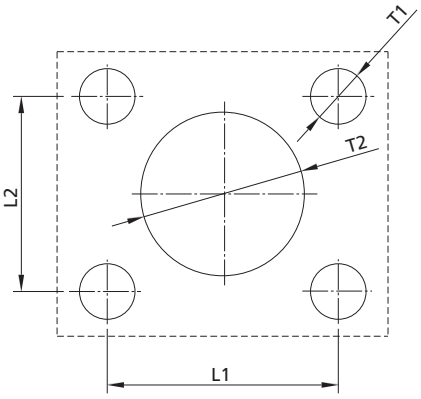

FITOK

Part Number Description

BPSS - ML20 - FL12 - FNS8 - P13N - OSHQ3ML - SF2

Series	Body Material	Connection 1 Type	Connection 1 Size	Connection 2/3 Type	Connection 2/3 Size	Seat Meterial	Orifice Size	O-ring Material	Handle/Actuator	For Actuator	Flow Pattern	Panel Mounting	Locking Device	Special Application	Cleaning and Packaging

Series

BP	

Body Material

SS	316 SS
S4	304 SS
S1	321 SS
904L	904L SS

Connection 1 Type

FNS	Female NPT
NS	Male NPT
FRT	Female BSPT
RT	Male BSPT
FMS	Female Metric Thread (for RG)
MS	Male Metric Thread (for RG)
FRP	Female BSPP (for RP)
BP	Male BSPP (for RG)
FL	Fractional Tube Fitting
ML	Metric Tube Fitting
UFB	British Tube Pipe union joint butt welding
UMB	Metric Tube Pipe union joint butt welding
UPB	Then live Pipe pipe butt welding

Connection 1 Size

4	1/4" or 4 mm
6	3/8" or 6 mm
8	1/2" or 8 mm
10	5/8" or 10 mm
12	3/4" or 12 mm
14	14 mm or M14 x 1.5
16	1" or 16 mm
18	18 mm
20	20 mm or M20 x 1.5
22	22 mm or M22 x 1.5
25	25 mm
28	28 mm
30	30 mm
32	32 mm

Connection 2/3 Type / Connection 2/3 Size

	Same as Connection 1

Specify in the same way as the Connection 1 type and size

Seat Meterial

	PVDF
K	PCTFE
P	PEEK

Orifice Size

10	0.39" (10.0 mm)
13	0.50" (12.7 mm)
19	0.71" (18.0 mm)

O-ring Material

	Fluorocarbon FKM
B	Buna-N
N	Neoprene
E	Ethylene propylene

Handle/Actuator

	SS with Yellow Vinyl Cover
C	SS with Red Vinyl Cover
J	SS with Blue Vinyl Cover
CS	90° Normally Closed Spring Return Pneumatic Actuator
OS	90° Normally Open Spring Return Pneumatic Actuator
DA	90° Double Acting Pneumatic Actuator
LX	180° Left end normally open spring return pneumatic actuator
RX	180° Right end normally open spring return pneumatic actuator
DX	180° Double Acting Pneumatic Actuator
EA	90° Electric Actuator
EX	180° Electric Actuator

For Actuator

	NO
H	Mechanical Limit Switch
N	Inductive Limit Switch
Q	Electromagnetic Valve
HQ	Mechanical Limit Switch and Electromagnetic Valve
NQ	Inductive Limit Switch and Electromagnetic Valve

Flow Pattern

	Straight
3	3-Way (Vertical Pattern)
3S	3-Way (Horizontal Pattern)

Panel Mounting

	Without Panel Mounting
M	With Panel Mounting

Locking Device

	No
L	Yes

Special Application

	NO
S	NACE MR0175

Cleaning and Packaging

	FC-01
F2	FC-02

1. Standard thread pitch for metric threads are as follows:
M10 and below: 1 mm
M12 to M24: 1.5 mm
M27 and above: 2 mm
Standard thread pitch should be ignored in the ordering number, others should be specified.
2. FO means FITOK O-seal fittings.
FR means FITOK metal ring seal fittings.
3. For information about pneumatic and electric actuator, please contact the authorized representative or FITOK Group.
4. For oxygen or virulent medium service, contact the authorized representative or FITOK Group.
5. Cleaning and Packaging:
FC-01: Standard cleaning and packaging for general industrial procedures.
FC-02: Special cleaning and packaging for wetted system components to ensure compliance with product cleanliness requirements of ASTM G93 Level C.

Note: Most configurations are available but not everyone. If in doubt, please contact FITOK group or authorized agent.