One-piece Instrumentation Ball Valves

BO Series

Features

- ◎ Working pressure up to: 3000 psig (207 bar)
- ◎ Working temperature: -65°F to 300°F (-54°C to 148°C)
- ◎ Size from 1/16" to 3/4" or 3 mm to 18 mm
- ◎ 2-, 3-, 4-, 5-, 6- and 7-way models for on-off, switching and crossover service available
- ◎ One-piece body and one-piece ball stem
- ◎ No dead zone, such as area between the ball and valve chamber
- ◎ In-line inspection and repair after system relieved by top entry design
- ◎ Thermal cycle performance improved and wear compensated by live-loaded design
- ◎ Any reasonable connections available
- ◎ Pneumatic and electric actuator available
- ◎ Handle color options are available
- ◎ Full operating pressure at any port
- ◎ Leak-tight performance testing with nitrogen or compressed air for every valve at the maximum working pressure to meet the requirement of no visible leak

Pressure vs. Temperature

PFA, UHMWPE Packing Seat

The working temperature of UHMWPE packing seat should not be higher than 65℃ (150℉).

2-, 3-way, Angle Valves

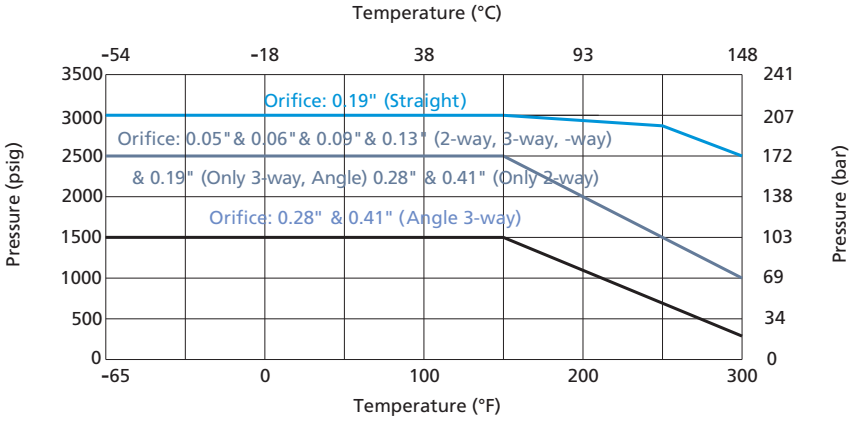

4-, 5-, 6-, 7-way Valves

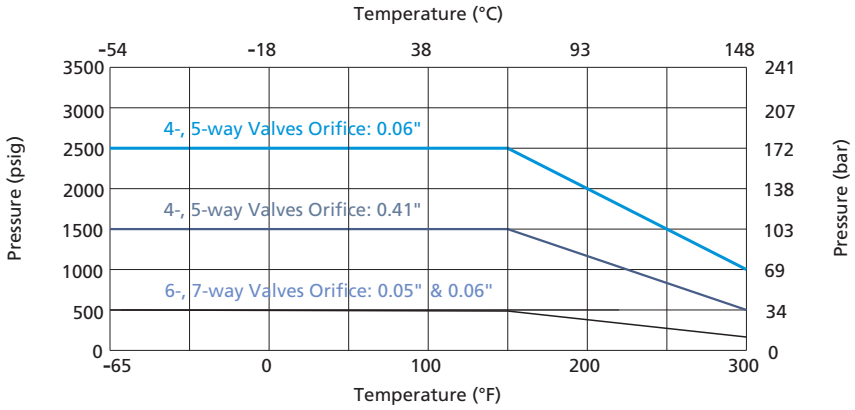

Crossover (4-, 6-way) Valves

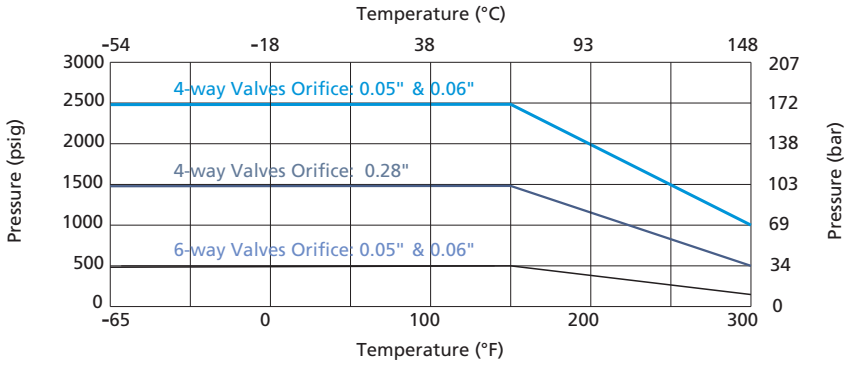

PTFE Packing Seat

2-, 3-way, Angle Valves

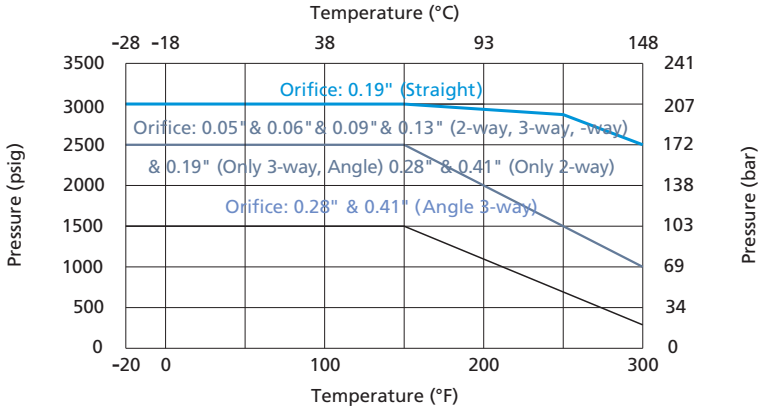

4-, 5-, 6-, 7-way Valves

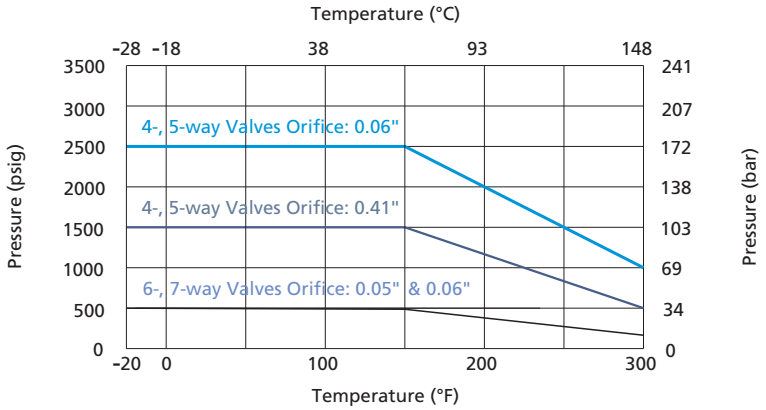

Crossover (4-, 6-way) Valves

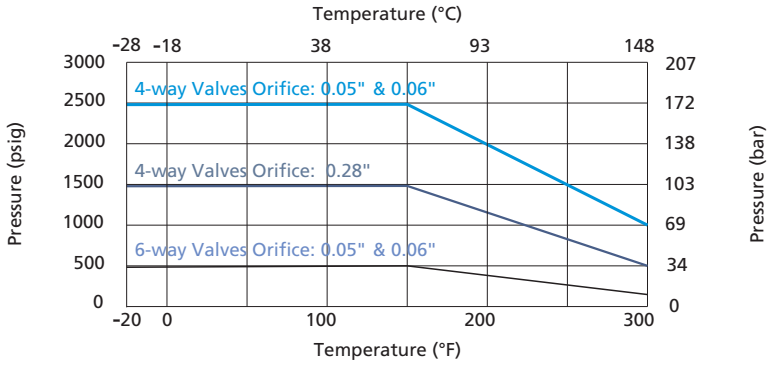

Note: 1. To prevent seat leakage, packing adjustment may be required periodically during the service life of the valve
2. A higher initial actuation torque may happen to the valves that have not been cycled for a period of time.
3. Before installation, instrumentation ball valves exposed to dynamic temperature conditions may lose their initial packing load. Stem packing adjustment should be required.

Standard Materials of Construction

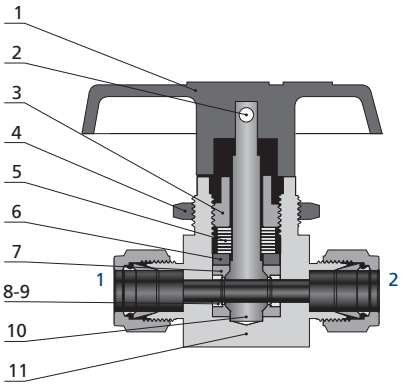

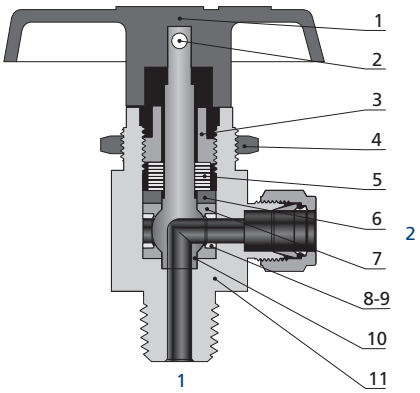

Item	Component	Valve Body Material		
		SS	Brass	Alloy 400
		Material Grade/ASTM Specification		
1	Handle	Nylon or Aluminium		
2	Set Screw	SS		
3	Packing Bolt	316 SS/A276	Brass CDA 36000/B16	Alloy R-405/B164
4	Panel Nut	316 SS/A276	Brass CDA 36000/B16	316 SS/A276
5	Dishing Spring	S17700/A693		
6	Gland	316 SS/A276	Brass CDA 36000/B16	Alloy 400/B164
7	*Packing Seat*	*PTFE/D1710 or UHMWPE/D4020 or PFA/D3307*		
8	*Support Ring*	*316 SS/A276*	Brass	*Alloy 400/B164*
9	*Support Disc*			
10	*Ball Stem*	*316 SS/A276*	*Brass CDA 36000/B16*	*Alloy 400/B164*
11	*Body*	*316 SS/A182*	*Brass CDA 37700/B16*	*Alloy 400/B164*
Wetted Lubricant		*Fluorinated-based and silicone-based*		
Non-wetted Lubricant		Molybdenum disulfide with hydrocarbon binder coat		

Note: Wetted components are listed in italic.
Other materials are available upon request.

Dimensions

2-way Valves

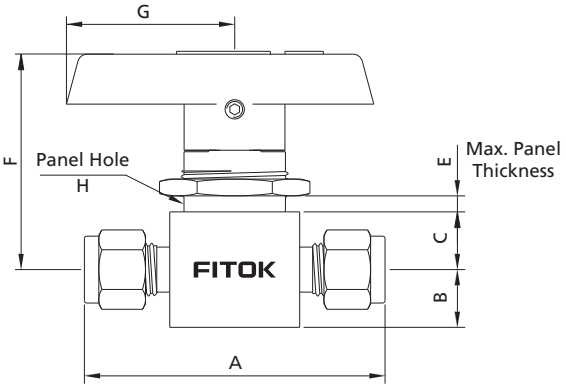

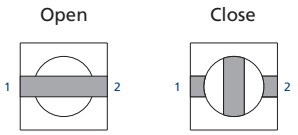

Angle Pattern Valves

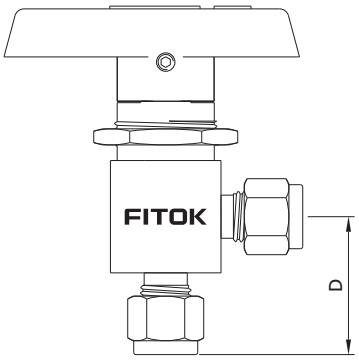

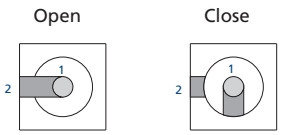

Basic Ordering Number	Connection Type and Size	Orifice in. (mm)	Cv		Dimension, in. (mm)							
			Straight	Angle	A	B	C	D	E	F	G	H
BO□□-FL1-00	1/16" FITOK	0.05 (1.3)	0.10	——	1.68 (42.7)	0.28 (7.1)	0.34 (8.6)	——	1/4 (6.4)	1.43 (36.2)	1.10 (28)	19/32 (15.1)
BO□□-FL2-02	1/8" FITOK	0.09 (2.4)	0.20	0.15	2.01 (51.1)			0.97 (24.6)				
BO□□-FL4-03	1/4" FITOK	0.13 (3.2)	0.60	0.35	2.21 (56.1)			1.07 (27.2)				
BO□□-FL4-05		0.19 (4.8)	1.40	0.90	2.39 (60.7)	0.38 (9.7)	0.44 (11.2)	1.17 (29.7)	3/16 (4.8)	1.64 (41.7)	1.57 (39.9)	25/32 (19.8)
BO□□-FL6-05	3/8" FITOK		1.50		2.58 (65.5)			1.29 (32.8)				
BO□□-FL6-07		0.28 (7.1)	6.00	2.00	3.05 (77.5)	0.56 (14.2)	0.56 (14.2)	1.43 (36.3)	0.35 (9)	2.19 (55.5)	2.05 (52)	1 1/8 (28.6)
BO□□-FL8-10	1/2" FITOK	0.41 (10.3)	6.40	3.80	3.92 (99.6)	0.69 (17.5)	0.69 (17.5)	1.74 (44.2)	0.49 (12.5)	2.67 (67.7)	3.13 (79.6)	1 1/2 (38.1)
BO□□-FL12-10	3/4" FITOK		12.00	4.60								
BO□□-ML3-02	3 mm FITOK	0.09 (2.4)	0.20	0.15	2.01 (51.1)	0.28 (7.1)	0.34 (8.6)	0.97 (24.6)	1/4 (6.4)	1.43 (36.2)	1.10 (28)	19/32 (15.1)
BO□□-ML6-03	6 mm FITOK	0.13 (3.2)	0.60	0.35	2.21 (56.1)			1.07 (27.2)				
BO□□-ML6-05		0.19 (4.8)	1.40	0.90	2.39 (60.7)	0.38 (9.7)	0.44 (11.2)	1.17 (29.7)	3/16 (4.8)	1.64 (41.7)	1.57 (39.9)	25/32 (19.8)
BO□□-ML8-05	8 mm FITOK		1.50		2.46 (62.5)			1.20 (30.5)				
BO□□-ML10-07	10 mm FITOK	0.28 (7.1)	6.00	2.00	3.07 (78.0)	0.56 (14.2)	0.56 (14.2)	1.43 (36.3)	0.35 (9)	2.19 (55.5)	2.05 (52)	1 1/8 (28.6)
BO□□-ML12-10	12 mm FITOK	0.41 (10.3)	12.00	4.60	3.92 (99.6)	0.69 (17.5)	0.69 (17.5)	1.74 (44.2)	0.49 (12.5)	2.67 (67.7)	3.13 (79.6)	1 1/2 (38.1)

Basic Ordering Number	Connection Type and Size	Orifice in. (mm)	Cv		Dimension, in. (mm)							
			Straight	Angle	A	B	C	D	E	F	G	H
BO□□-FNS2-03	1/8 Female NPT	0.13 (3.2)	0.50	0.30	1.63 (41.4)	0.28 (7.1)	0.34 (8.6)	0.81 (20.6)	1/4 (6.4)	1.43 (36.2)	1.10 (28)	19/32 (15.1)
BO□□-FNS2-05		0.19 (4.8)	1.20	0.70	2.00 (50.8)	0.38 (9.7)	0.44 (11.2)	1.00 (25.4)	3/16 (4.8)	1.64 (41.7)	1.57 (39.9)	25/32 (19.8)
BO□□-FNS4-05	1/4 Female NPT		0.90	0.75	2.06 (52.3)			1.03 (26.2)				
BO□□-FNS4-07		0.28 (7.1)	3.00	1.70	2.50 (63.5)	0.56 (14.2)	0.56 (14.2)	1.25 (31.8)	0.35 (9)	2.19 (55.5)	2.05 (52)	11/8 (28.6)
BO□□-FNS6-07	3/8 Female NPT		2.60	1.50								
BO□□-FNS8-10	1/2 Female NPT	0.41 (10.3)	6.30	3.50	3.12 (79.2)	0.69 (17.5)	0.69 (17.5)	1.56 (39.6)	3/8 (9.5)	2.67 (67.7)	3.13 (79.6)	11/2 (38.1)
BO□□-NS4-05	1/4 Male NPT	0.19 (4.8)	1.20	0.75	2.00 (50.8)	0.38 (9.7)	0.44 (11.2)	1.03 (26.2)	3/16 (4.8)	1.64 (41.7)	1.57 (39.9)	25/32 (19.8)
BO□□-FRT4-05	1/4 Female BSPT		0.90	—	2.06 (52.3)			—				
BO□□-FRT6-07	3/8 Female BSPT	0.28 (7.1)	2.60		2.50 (63.5)	0.56 (14.2)	0.56 (14.2)		0.35 (9)	2.19 (55.5)	2.05 (52)	1 1/8 (28.6)
BO□□-FRT8-10	1/2 Female BSPT	0.41 (10.3)	6.30		3.12 (79.2)	0.69 (17.5)	0.69 (17.5)		0.49 (12.5)	2.67 (67.7)	3.13 (79.6)	1 1/2 (38.1)
BO□□-NS4-FL4-05	1/4 Male NPT	0.19 (4.8)	1.60	0.75	2.20 (55.9)	0.38 (9.7)	0.44 (11.2)	1.03 (26.2)	3/16 (4.8)	1.64 (41.7)	1.57 (39.9)	25/32 (19.8)
BO□□-FO4-03	1/4 Male FO	0.13 (3.2)	0.60	0.35	1.75 (44.4)	0.38 (9.7)	0.34 (8.6)	0.94 (23.9)	1/4 (6.4)	1.43 (36.2)	1.10 (28)	19/32 (15.1)
BO□□-FO4-05		0.19 (4.8)	2.40	0.90	1.88 (47.8)		0.44 (11.2)		3/16 (4.8)	1.64 (41.7)	1.57 (39.9)	25/32 (19.8)
BO□□-FR4-03	1/4 Male FR	0.13 (3.2)	0.60	0.35	2.13 (54.1)		0.34 (8.6)	1.09 (27.7)	1/4 (6.4)	1.43 (36.2)	1.10 (28)	19/32 (15.1)
BO□□-FR4-05		0.19 (4.8)	2.40	0.90			0.44 (11.2)		3/16 (4.8)	1.64 (41.7)	1.57 (39.9)	25/32 (19.8)
BO□□-FR8-07	1/2 Male FR	0.28 (7.1)	6.00	—	2.88 (73.2)	0.56 (14.2)		—	0.35 (9)	2.19 (55.5)	2.05 (52)	1 1/8 (28.6)
BO□□-FR8-10		0.41 (10.3)	12.00		3.12 (79.2)	0.69 (17.5)			0.49 (12.5)	2.67 (67.7)	3.13 (79.6)	1 1/2 (38.1)

Switching (3-, 4-, 5-, 6- and 7-way) Valves

3-way Valve

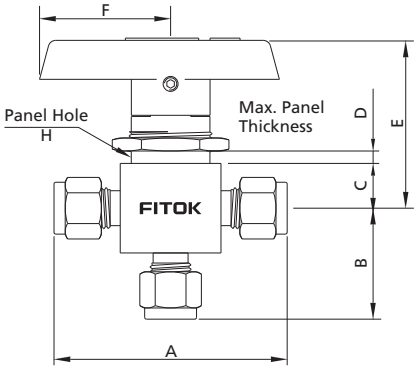

4-, 5-way Valve

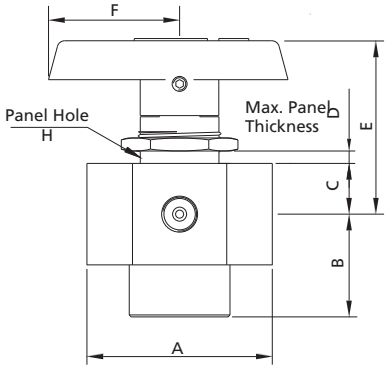

6-, 7-way Valve

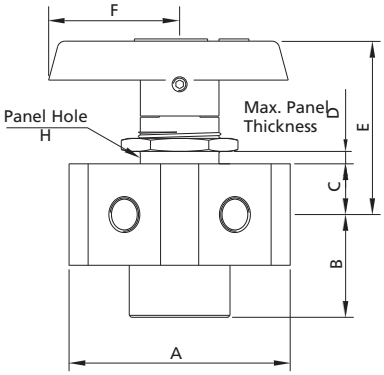

3L Flow Pattern

4L Flow Pattern

5L Flow Pattern

6L Flow Pattern

7L Flow Pattern

Special Flow Pattern

3HL Flow Pattern

5H Flow Pattern

5HL Flow Pattern

5LV Flow Pattern

Basic Ordering Number	Connection Type and Size	Orifice in. (mm)	Cv	Dimension, in. (mm)						
				A	B	C	D	E	F	H
3-way Valve										
BO□□-FL1-00-3L	1/16" FITOK	0.05 (1.3)	0.08	1.68 (42.7)	0.81 (20.6)	0.34 (8.6)	1/4 (6.4)	1.43 (36.2)	1.10 (28)	19/32 (15.1)
BO□□-FL2-02-3L	1/8" FITOK	0.09 (2.4)	0.15	2.01 (51.1)	0.97 (24.6)					
BO□□-FL4-03-3L	1/4" FITOK	0.13 (3.2)	0.35	2.21 (56.1)	1.07 (27.2)					
BO□□-FL4-05-3L		0.19 (4.8)	0.90	2.39 (60.7)	1.17 (29.7)	0.44 (11.2)	3/16 (4.8)	1.64 (41.7)	1.57 (39.9)	25/32 (19.8)
BO□□-FL6-07-3L	3/8" FITOK	0.28 (7.1)	2.00	2.89 (73.4)	1.43 (36.3)	0.56 (14.2)	0.35 (9)	2.19 (55.5)	2.05 (52)	11/8 (28.6)
BO□□-FL8-10-3L	1/2" FITOK	0.41 (10.3)	4.60	3.48 (88.4)	1.74 (44.2)	0.69 (17.5)	0.49 (12.5)	2.67 (67.7)	3.13 (79.6)	11/2 (38.1)
BO□□-FL12-10-3L	3/4" FITOK		4.90							

Basic Ordering Number	Connection Type and Size	Orifice in. (mm)	Cv	Dimension, in. (mm)						
				A	B	C	D	E	F	H
BO□□-ML3-02-3L	3 mm FITOK	0.09 (2.4)	0.15	2.01 (51.1)	0.97 (24.6)	0.34 (8.6)	1/4 (6.4)	1.43 (36.2)	1.10 (28)	19/32 (15.1)
BO□□-ML6-03-3L	6 mm FITOK	0.13 (3.2)	0.35	2.21 (56.1)	1.07 (27.2)					
BO□□-ML6-05-3L		0.19 (4.8)	0.90	2.39 (60.7)	1.17 (29.7)	0.44 (11.2)	3/16 (4.8)	1.64 (41.7)	1.57 (39.9)	25/32 (19.8)
BO□□-ML8-05-3L	8 mm FITOK		0.80	2.46 (62.5)	1.20 (30.5)					
BO□□-ML10-07-3L	10 mm FITOK	0.28 (7.1)	2.00	2.89 (73.4)	1.43 (36.3)	0.56 (14.2)	0.35 (9)	2.19 (55.5)	2.05 (52)	1 1/8 (28.6)
BO□□-ML12-10-3L	12 mm FITOK	0.41 (10.3)	4.60	3.48 (88.4)	1.74 (44.2)	0.69 (17.5)	0.49 (12.5)	2.67 (67.7)	3.13 (79.6)	1 1/2 (38.1)
BO□□-FNS2-03-3L	1/8 Female NPT	0.13 (3.2)	0.30	1.63 (41.4)	0.81 (20.6)	0.34 (8.6)	1/4 (6.4)	1.43 (36.2)	1.10 (28)	19/32 (15.1)
BO□□-FNS4-05-3L	1/4 Female NPT	0.19 (4.8)	0.75	2.06 (52.3)	1.03 (26.2)	0.44 (11.2)	3/16 (4.8)	1.64 (41.7)	1.57 (39.9)	25/32 (19.8)
BO□□-FNS4-07-3L		0.28 (7.1)	1.70	2.46 (62.5)	1.18 (30)	0.56 (14.2)	0.35 (9)	2.19 (55.5)	2.05 (52)	1 1/8 (28.6)
BO□□-FNS6-07-3L	3/8 Female NPT		1.50							
BO□□-FNS8-10-3L	1/2 Female NPT	0.41 (10.3)	3.50	3.13 (79.5)	1.56 (39.6)	0.69 (17.5)	3/8 (9.5)	2.67 (67.7)	3.13 (79.6)	1 1/2 (38.1)
BO□□-FRT4-05-3L	1/4 Female BSPT	0.19 (4.8)	0.75	2.06 (52.3)	1.03 (26.2)	0.44 (11.2)	3/16 (4.8)	1.64 (41.7)	1.57 (39.9)	25/32 (19.8)
BO□□-FRT6-07-3L	3/8 Female BSPT	0.28 (7.1)	1.50	2.46 (62.5)	1.18 (30)	0.56 (14.2)	0.35 (9)	2.19 (55.5)	2.05 (52)	1 1/8 (28.6)
BO□□-FRT8-10-3L	1/2 Female BSPT	0.41 (10.3)	3.50	3.13 (79.5)	1.56 (39.6)	0.69 (17.5)	0.49 (12.5)	2.67 (67.7)	3.13 (79.6)	1 1/2 (38.1)
4 - & 5-way Valve										
BO□□-FL2-01-4L	1/8" FITOK	0.06 (1.6)	0.07	2.36 (60)	1.32 (33.5)	0.44 (11.2)	5/32 (4.1)	1.76 (44.6)	1.57 (39.9)	29/32 (23.1)
BO□□-FL2-01-5L										
BO□□-FNS2-01-4L	1/8 Female NPT	0.06 (1.6)	0.07	1.85 (47)	0.88 (22.4)					
BO□□-FNS2-01-5L				1.55 (39.4)						
BO□□-FNS8-10-4L	1/2 Female NPT	0.41 (10.3)	3.50	3.13 (79.5)	1.56 (39.6)	0.69 (17.5)	0.41 (10.5)	2.76 (70.2)	2.63 (66.7)	1 1/2 (38.1)
BO□□-FNS8-10-5L										
6 - & 7-way Valve										
BO□□-FL1-00-6L	1/16" FITOK	0.05 (1.3)	0.05	2.64 (67)	1.32 (33.5)	0.44 (11.2)	0.28 (7)	1.76 (44.6)	1.57 (39.9)	29/32 (23.1)
BO□□-FL1-00-7L										
BO□□-FL2-01-6L	1/8" FITOK	0.06 (1.6)	0.07	2.26 (57.6)	0.97 (24.7)					
BO□□-FL2-01-7L										

Crossover (4-, 6-way) Valves

4-way Valve

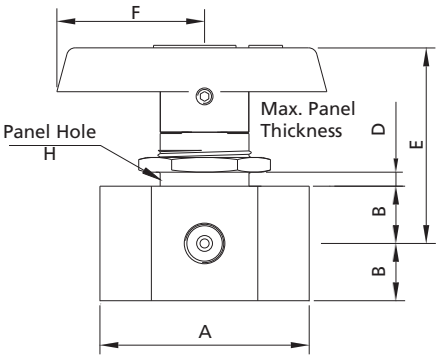

6-way Valve

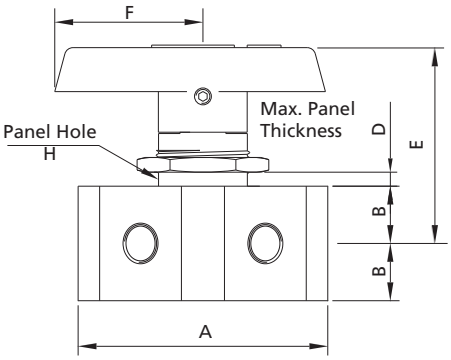

4C Flow Pattern

6C Flow Pattern

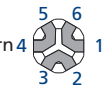

Special Flow pattern

4H Flow Pattern

4HL Flow Pattern

4V Flow Pattern

Basic Ordering Number	Connection Type and Size	Orifice in. (mm)	Cv	Dimension, in. (mm)					
				A	B	D	E	F	H
4-way Valve									
BO□□-FL1-00-4C	1/16" FITOK	0.05 (1.3)	0.06	1.95 (49.6)	0.44 (11.2)	3/16 (4.8)	1.64 (41.7)	1.57 (39.9)	25/32 (19.8)
BO□□-FL2-01-4C	1/8" FITOK	0.06 (1.6)	0.08	2.61 (66.3)					
BO□□-FNS2-01-4C	1/8 Female NPT			1.55 (39.4)					
BO□□-FNS8-07-4C	1/2 Female NPT	0.28 (7.1)	1.60	3.13 (79.5)	0.69 (17.5)	0.48 (12.2)	2.67 (67.7)	3.13 (79.6)	1 1/2 (38.1)
6-way Valve									
BO□□-FL1-00-6C	1/16" FITOK	0.05 (1.3)	0.06	1.95 (49.5)	0.44 (11.2)	3/16 (4.8)	1.68 (42.7)	1.53 (38.9)	29/32 (23.1)
BO□□-FL2-01-6C	1/8" FITOK	0.06 (1.6)	0.08	2.59 (65.8)					

1. FITOK means FITOK double ferrule tube fittings.
2. Sizes and types listed are standard. Other sizes and types are available upon request, refer to the ordering information.
3. Dimensions are shown with FITOK nuts finger-tightened. All dimensions are for reference only and are subject to change. For dimensions not shown above, please contact the authorized representative or FITOK Group.

Vent Port Options

Vented Valves

The maximum working pressure for vented valves is 500 psig (34.4 bar).

Straight-pattern Valves

A vent hole in the side of the valve body makes the downstream port vent to atmosphere when the valve is closed.

Angle-pattern and 3-way Valves

A vent hole in the side of the valve body makes the bottom port vent to atmosphere when the valve is closed.

Welded Vent Port Connections

A FITOK tube fitting or a tube stub welded to the vent port is available for stainless steel vented valves.

Bottom Screw Panel Mounting Options

Remark

The bottom screw panel mounting options are not available on angle-pattern valves, 3-way valves, 6-way valves and 7-way valves.

Mounting Dimension

2-way

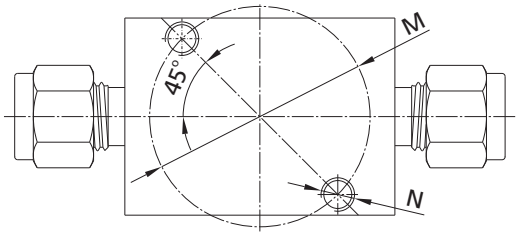

4-way

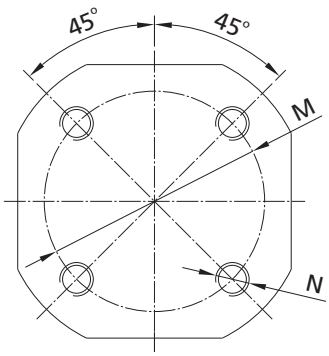

5-way

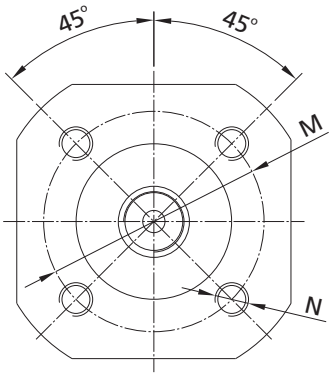

	Orifice in. (mm)	Dimensions, in. (mm)	
		M	N
2-way	0.05~0.13 (1.3~3.2)	0.63 (15.88)	M2.5 x 0.45 deep 0.24" (6)
	0.19 (4.8)	0.88 (22.23)	M3 x 0.5 deep 0.24" (6)
	0.28 (7.1)	1.25 (31.75)	M5 x 0.8 deep 0.24" (6)
	0.41 (10.3)	1.63 (41.28)	M5 x 0.8 deep 0.24" (6)
4-way	0.05~0.06 (1.3~1.6)	1.25 (31.75)	M5 x 0.8 deep 0.24" (6)
	0.28 (7.1)	2.00 (50.8)	M5 x 0.8 deep 0.24" (6)
5-way	0.05~0.06 (1.3~1.6)	1.25 (31.75)	M5 x 0.8 deep 0.24" (6)
	0.41 (10.3)	2.00 (50.8)	M5 x 0.8 deep 0.24" (6)

Part Number Description

BOSS - ML6 - FL4 - ML8 - H05 - OSHQ3LBFL4 - SF2

Series	Body Material	Connection 1 Type	Connection 1 Size	Connection 2 to 7 Type	Connection 2 to 7 Size	Seat Meterial	Orifice Size	Handle/Actuator	For Actuator	Flow Pattern	Panel Installation	Vent Port	Special Application	Cleaning and Packaging

Series

BO	

Body Material

SS	316 SS
S4	304 SS
S1	321 SS
6L	316L SS
B	Brass
M	Alloy 400
904L	904L SS

Connection 1 Type

FNS	Female NPT
NS	Male NPT
FRT	Female BSPT
RT	Male BSPT
FMS	Female Metric Thread (for RG)
MS	Male Metric Thread (for RG)
FRP	Female BSPP (for RP)
FL	Fractional Tube Fitting
ML	Metric Tube Fitting
FO	FO Fitting
FR	Male FR Fitting

Connection 1 Size

1	1/16"
2	1/8"
3	3 mm
4	1/4"
6	3/8" or 6 mm
8	1/2" or 8 mm
10	10 mm
12	3/4" or 12 mm
14	14 mm
16	16 mm
18	18 mm

Connection 2 to 7 Type / Connection 2 to 7 Size

	Same as connection 1
Specified in the same way as the connection 1 type and size	

Seat Meterial

	PTFE
H	UHMWPE
A	PFA

Orifice Size

00	0.05" (1.3 mm)
01	0.06" (1.6 mm)
02	0.09" (2.4 mm)
03	0.13" (3.2 mm)
05	0.19" (4.8 mm)
07	0.28" (7.1 mm)
10	0.41" (10.3 mm)

Handle/Actuator

	Black Nylon
C	Red Nylon
F	Green Nylon
J	Blue Nylon
U	Black Aluminium
CS	90° Normally Closed Spring Return Pneumatic Actuator
OS	90° Normally Open Spring Return Pneumatic Actuator
DA	90° Double Acting Pneumatic Actuator
LX	180° Left end normally open spring return pneumatic actuator
RX	180° Right end normally open spring return pneumatic actuator
DX	180° Double Acting Pneumatic Actuator
EA	90° Electric Actuator
EX	180° Electric Actuator

For Actuator

	NO
H	Mechanical Limit Switch
N	Inductive Limit Switch
Q	Electromagnetic Valve
HQ	Mechanical Limit Switch and Electromagnetic Valve
NQ	Inductive Limit Switch and Electromagnetic Valve

Flow Pattern

	Straight
A	Angle
3L	3-way
3HL	3-way
4L	4-way
4C	4-way
4H	4-way
4HL	4-way
4V	4-way
5L	5-way
5H	5-way
5HL	5-way
5LV	5-way
6L	6-way
6C	6-way
7L	7-way

Panel Installation

	Panel nut
B	Bottem screw

Vent Port

	No vent port
FL2	1/8" tube fitting
FL4	1/4" tube fitting
FL6	3/8" tube fitting
ML3	3 mm tube fitting
ML6	6 mm tube fitting
ML8	8 mm tube fitting

Special Application

	NO
S	NACE MR0175

Cleaning and Packaging

	FC-01
F2	FC-02

1. *Dimensions are shown with FITOK nuts finger-tightened. All dimensions are for reference only and are subject to change.*
2. *Sizes and types listed are standard. Other sizes and types are available upon request.*
3. *For information about pneumatic and electric actuator, please contact the authorized representative or FITOK Group.*
4. *For oxygen or virulent medium service, contact the authorized representative or FITOK Group.*
5. *Cleaning and Packaging:*
   FC-01: Standard cleaning and packaging for general industrial procedures.
   FC-02: Special cleaning and packaging for wetted system components to ensure compliance with product cleanliness requirement of ASTM G93 Level C.

Note: Most configurations are available but not everyone. if in doubt, please contact FITOK group or authorized agent.